Factoryfurniture

SERPENTINE bench & stool - granite

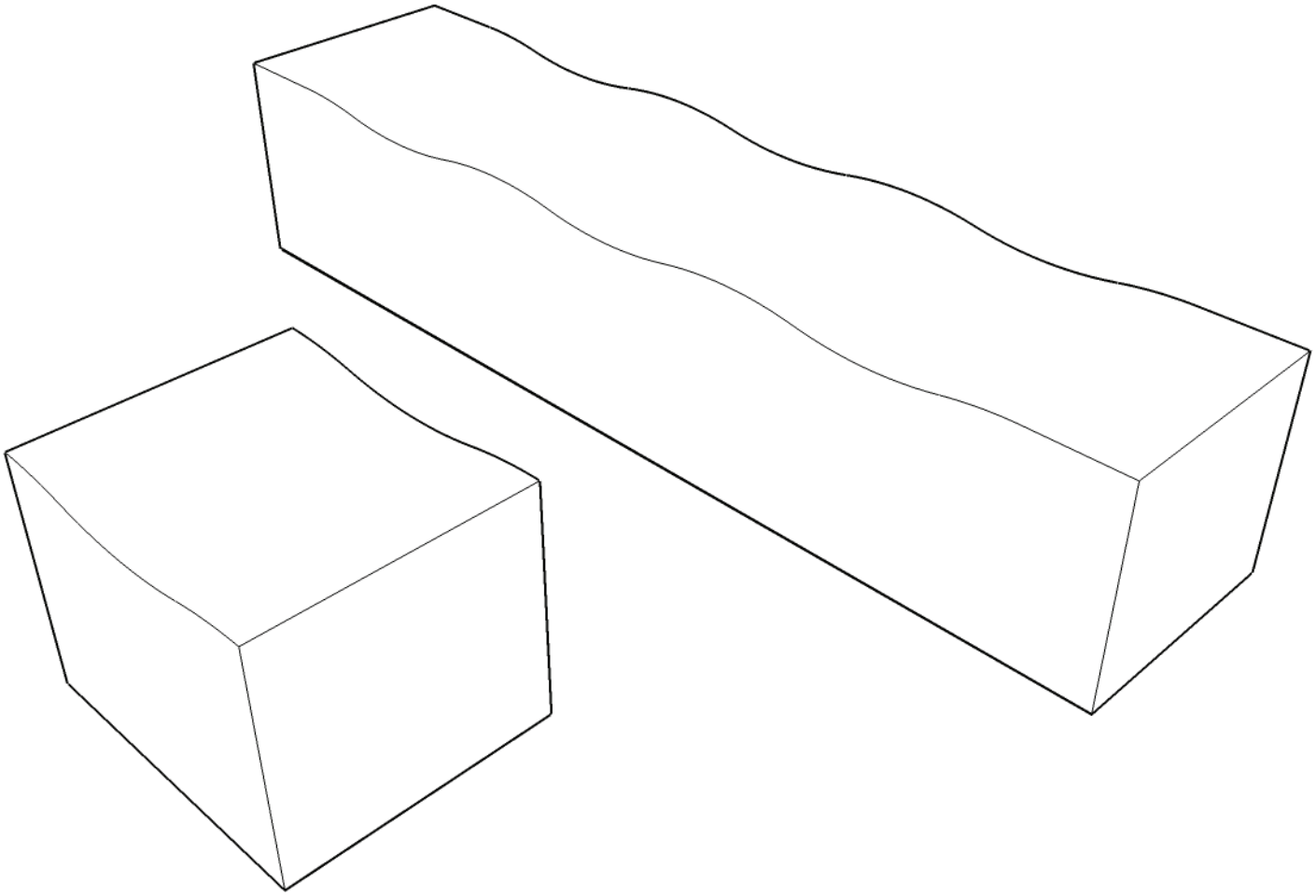

Operation & Maintenance Manual

Factory Furniture Ltd | The Stableyard | Coleshill | Swindon SN6 7PT | T +44 (0)1793 763829 | F +44 (0)1793 861615
sales@factoryfurniture.co.uk | www.factoryfurniture.co.uk

We reserve the right to change specification without notice. © 2008 Factory Furniture Ltd

Introduction

Design
Design, shop drawings and development by Factory Furniture Ltd

Manufacture
Factory Furniture manufactured components. Products are assembled in Factory workshops, checked and dispatched ready for installation. Replacement products or components thereof should be ordered direct from Factory Furniture Ltd

Copyright
The design copyright for the product and drawing copyright remains the sole property of Factory Furniture Ltd

General Specifications

Bench
Metric length 2200mm l width 500mm l height 450mm
Imperial length 5' 11" l width 1' 7½" l height 1' 5½"
** Not including +50mm below ground level for sub-surface fix option*

Approx Weight 1297kg *(1445kg sub-surface option)*

Stool
Metric length 600mm l width 500mm l height 450mm*
Imperial length 1' 11½" l width 1' 7½" l height 1' 5½"
** Not including +50mm below ground level for sub-surface fix option*

Approx Weight 352kg *(392kg sub-surface option)*

Detailed Material & Finish Specifications

Bench & Stool
- Manufactured from silver/grey granite with a light bush hammered finish

General Maintenance *(Recommended Schedule & Guidelines)*

Daily/Weekly/Monthly *(or as adopted)*
Visual checks of bench / stool - check all items for superficial or physical damage.

Three Monthly
Clean all items as detailed below check all fixings are seated correctly

Specific Maintenance Details

Granite
Clean with a stiff brush once per year, especially in more exposed locations, in order to prevent a verdigris type build up on the surface. Ideally, this should be completed in early spring.

Repairs

Heavy Damage
In the event of serious damage to any component, replacements should be ordered from Factory Furniture Ltd. In this event (or if the product needs to be disassembled for any reason), please contact Factory Furniture for detailed technical advice.

Reordering / Spares

There are no spare parts for this model of bench

AutoCAD Drawing List

FF1008 / 01	SERPENTINE (GRANITE) BENCH	FABRICATION DRAWING

Contacts

Factory Furniture Ltd,
The Stableyard,
Coleshill, Swindon.
Wiltshire SN6 7PT
U.K.

Tel +44 (0) 1793 763829
Fax +44 (0) 1793 861615
Email sales@factoryfurniture.co.uk
Web www.factoryfurniture.co.uk

Installation Instructions

ALL INSTALLATION WORKS TO BE CARRIED OUT BY COMPETENT PERSONNEL - INSTALL AS COMPLETE UNIT.

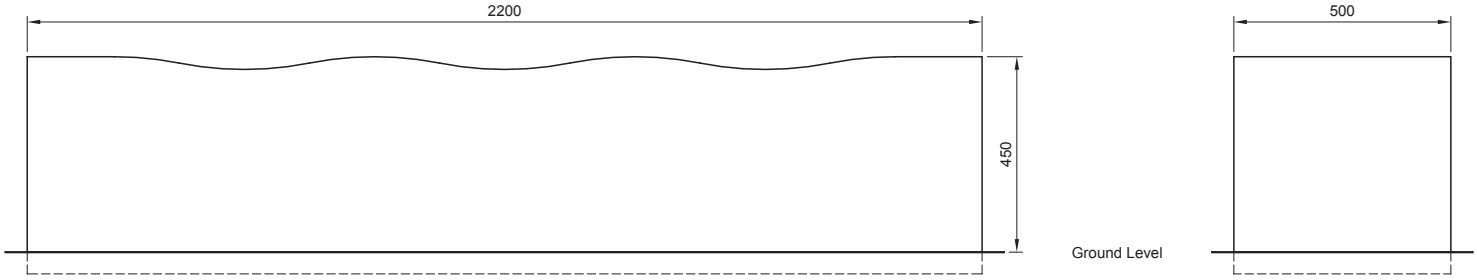

Bench *(Surface or sub surface fix)*

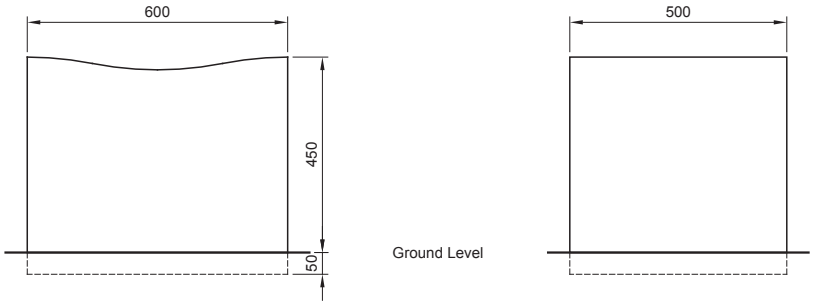

Stool *(Surface or sub surface fix)*

Serpentine Bench / Stool - Granite *(surface & sub-surface fix)*

1. Install suitable foundation pads to support the weight of the bench or stool each with top face at ground level (or 100mm below finished ground level for stool - sub-surface fix)
2. Position bench / stool in correct orientation with bases centrally on foundation pads.
3. Check level & re-instate ground level if necessary (sub-surface fix).